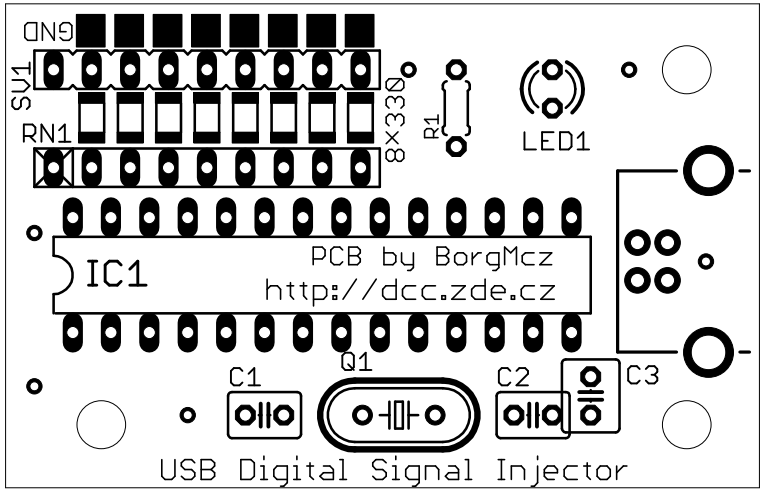
GND
SV1
RN1
8×33Ω
R1
LED1
IC1
PCB by BorgMcz
http://dcc.zde.cz
C1
Q1
C2
C3
USB Digital Signal Injector